Mechanical Data

Item	Standard Value	Unit
Module Dimension	75.0x52.7x8.9	mm
Viewing Area	60.0x32.6	mm
Dot Size	0.39x0.39	mm
Dot Pitch	0.43x0.43	mm

Absolute Maximum Rating

Item	Symbol	Standard Value			Unit
		min.	typ.	max.	
Power Supply	VDD-VSS	0	---	7.0	V
Input Voltage	VI	0	---	VDD	V

Note: VSS=0 Volt , VDD=5.0 Volt .

Electronical Characteristics

Item	Symbol	Condition	Standard Value			Unit
			min.	typ.	max.	
Input Voltage	VDD	VDD=5V	4.5	5.0	5.5	V
Supply Current	IDD	VDD=5V	1.7	2.0	2.3	mA
Recommended LC Driving Voltage for Normal Temp. Version module	VDD-VO	-20ºC	---	---	5.15	V
		0ºC	---	---	---	
		25ºC	---	5.14	---	
		50ºC	---	---	---	
		70ºC	5.09	---	---	
LED Forward Voltage	VF	25ºC	---	4.2	---	V
LED Forward Current	IF	25ºC	---	100	---	mA
EL Power Supply Current	IEF	Vel=110VAC;400Hz	---	---	5.0	mA

Feature

1. Built-in controller (ST7920)
2. +5V power supply
3. 1/64duty cycle
4. N.V.Built-in
5. Chinese Version Optional
6. Same size with RG12864B

Pin NO.	Symbol	Function
1	Vss	Ground
2	Vdd	Supply voltage for logic
3	Vo	Operating voltage for LCD
4	RS	H: Data L:Instruction
5	R/W	H: read data L:write data
6	E	Enable signal
7	DB0	Data bus line
8	DB1	Data bus line
9	DB2	Data bus line
10	DB3	Data bus line
11	DB4	Data bus line
12	DB5	Data bus line
13	DB6	Data bus line
14	DB7	Data bus line
15	A	Power Supply for LED backlight(+)
16	K	Power Supply for LED backlight(-)
17	$\overline{RES}$	Reset signal
18	VOUT	Positive Voltage Output
19	NC	No connection
20	NC	No connection
21	A	Power Supply for LED(+)
22	K	Power Supply for LED(-)

Graphic type

RG12864B2 Graphic 128x64 dots

Dimension drawing

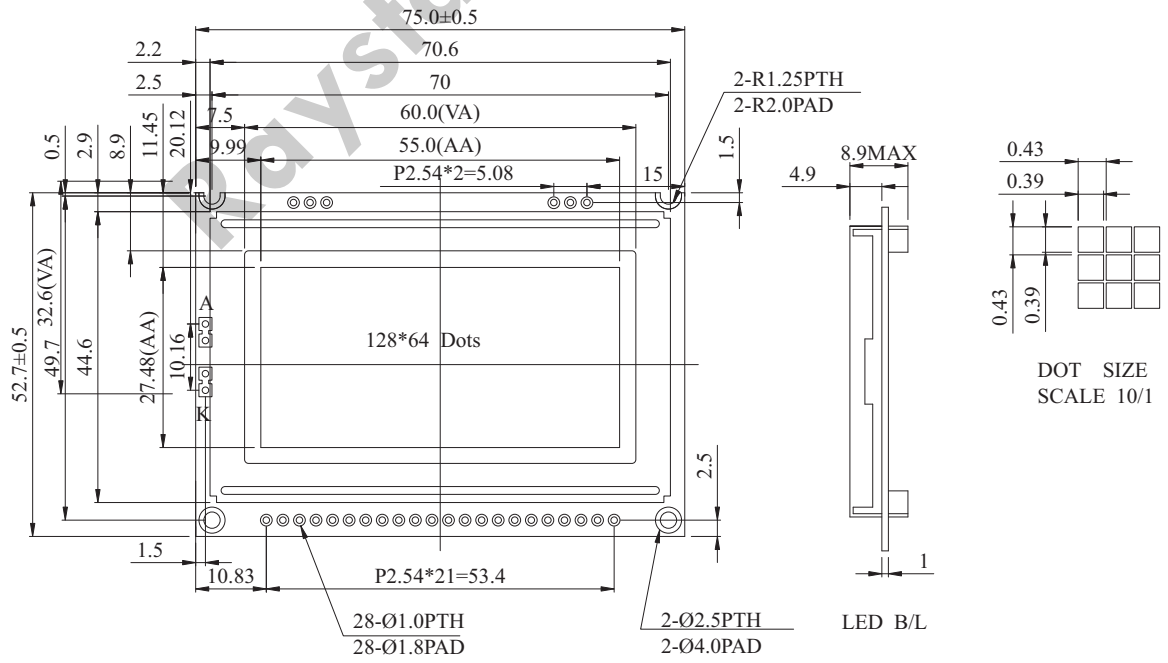

Raystar Optronics,Inc.